Set-A

	BRAC University **Department of Computer Science and Engineering** Semester: **Fall 2025** Course Code: **CSE460** Course Title: **VLSI Design**	**Final Examination** Full Marks: **15 x 2 + 10 = 40** Time: **1 hour 45 minutes** Date: **10 January 2026**

Student ID:	**Name:**	**Section:**

[Question 1, Question 2 and Question 3 are mandatory. Question 4 is a bonus question.
Return the question paper with the answer script.]

Question 1: [CO4]

Scenario 1:

Partition-1

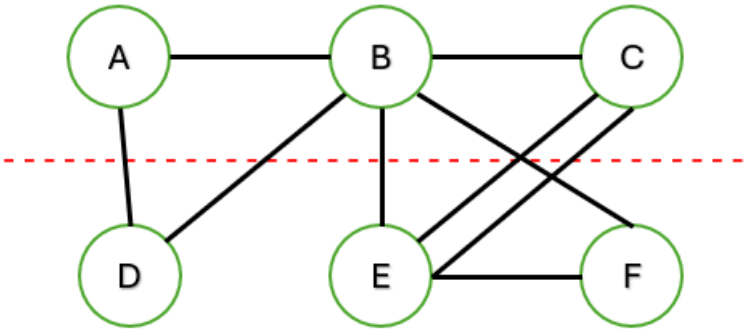

Partition-2

Fig.1

For question **(a)** and **(b)**, an initial cut for the partition of 6 circuit elements, A, B, C, D, E, and F are given in **Fig.1** the cut lines divide the circuit elements into two partitions, **Partition-1** and **Partition-2.**

Scenario 2:
For question **(c),** you are given a chip layout where you have 2 distinct sources and 2 distinct targets. You have to reach **T1** from **S1** and **T2** from **S2**. The Lee Maze algorithm is an algorithm for signal routing, which uses a sequential approach.

Here, **X** is an obstacle for signal routing.

				X			S1		
			T2						
				X					
		T1				S2			

				X			S1		
			T2						
				X					
		T1				S2			

				X			S1		
			T2						
				X					
		T1				S2			

				X			S1		
			T2						
				X					
		T1				S2			

(a)	**Find** the **initial Cut Cost** and the **cost** of moving each node.	[3]
(b)	i) **Write** down all the possible **gains** for the possible swaps in the first iteration and find the maximum gain in that iteration, ii) **Swap** the appropriate nodes and draw the updated partition graph. iii) **Find** the new cut cost and **justify** its value using the gain in the first iteration.	[4]
(c)	Using the Lee Maze algorithm, find the **shortest path** from S1 to T1 and from S2 to T2. Is there any chance for **multiple answers**? If so, which one is **better**? **Justify** your statement. [**Hints**: Refer to Lee Maze as a sequential approach] [**N.B**- Use the top two and bottom two boxes for the different cases. Complete all iterations for each source in one single box, and then back propagate and dictate the new metal connection in that box]	[8]

Question 2: [CO3]

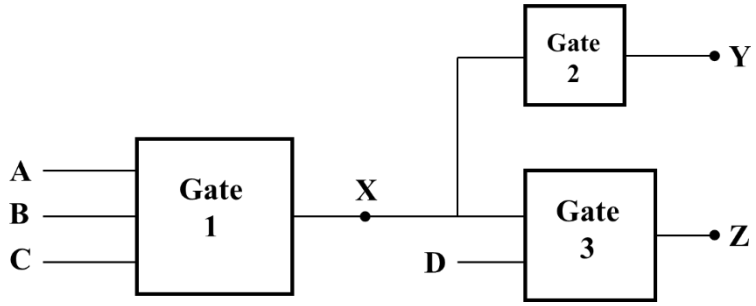

Fig. 2

The block diagram shown in **Fig. 2** represents a safety condition check system used in an industrial machine. Three safety signals are monitored as the inputs of the system:

- **A** = Door closed (1 = closed, 0 = open)
- **B** = Temperature within safe limit (1 = valid, 0 = invalid)
- **C** = Power supply ON (1 = ON, 0 = OFF)

When **all three safety conditions are satisfied (A=B=C=1)**, **Gate 1** produces a **LOW** value at node **X**.
The signal at node X is used in two ways:

1. The low value at X is processed by **Gate 2** to generate an **enable signal (Y=1)** that allows the machine to operate.
2. X is combined with an independent **fault signal (D,** 1 = fault detected**)** to generate a **shutdown signal (Z)**. A complete shutdown occurs **(Z=0)** when
   - A fault signal is present (D=1)
   - **or**, the safety conditions are violated (X=1)

The designer decided to implement the system with CMOS logic using a material where $\boldsymbol{\mu_n = 3\mu_p}$.

(a)	**Identify** Gate 1, Gate 2 and Gate 3.	[3]
(b)	**Draw** the simplified RC circuit of Gate 1. [Choose widths of PMOS and NMOS transistors to achieve worst-case effective rise and fall resistance equal to that of **a unit inverter (R)]**	[4]
(c)	**Determine** the total capacitance at node X.	[5]
(d)	**Derive** the expression for **propagation delay fall** (t_{pdf}) and **contamination delay rise** (t_{cdr}) at node X.	[3]

Question 3: [CO3]

Suppose you are designing a chip using a **1V, 28 nm** technology that consists of **180 million transistors**, of which **30% are used to build logic gates**, while the remaining transistors are used in **memory arrays**. The average width of a logic transistor is 7λ, and the average width of a memory transistor is 4λ. The chip occupies an area of 50 mm^2

The gate capacitance and diffusion capacitance are 0.02 fF/μm and 0.55 fF/μm, respectively, for the entire chip. Neglect wire capacitances. The operating **clock frequency** is 3.2 GHz.

During every **100 clock cycles**, the logic transistors experience 12 switching events (On-Off pair), while the memory transistors experience 4 switching events (On-Off pair).

Total **short circuit power** consumption is 0.5W.

You also obtain the following current data for each transistor:

- Gate leakage current = 3 nA/µm
- Junction leakage current = 1 nA/µm
- Subthreshold leakage current = 6 nA/µm

The acceptable total power consumption of the chip is 4 W.

(a)	Find the **activity factor** and **switching frequency** of the **logic gates** and the **memory arrays**.	[2]
(b)	**Estimate** the **dynamic power** and **static power** of the chip.	[6]
(c)	**Calculate** the **total power consumption.** Is the **total power consumption** within the acceptable range?	[2]

<u>Question 4:</u> [Bonus]

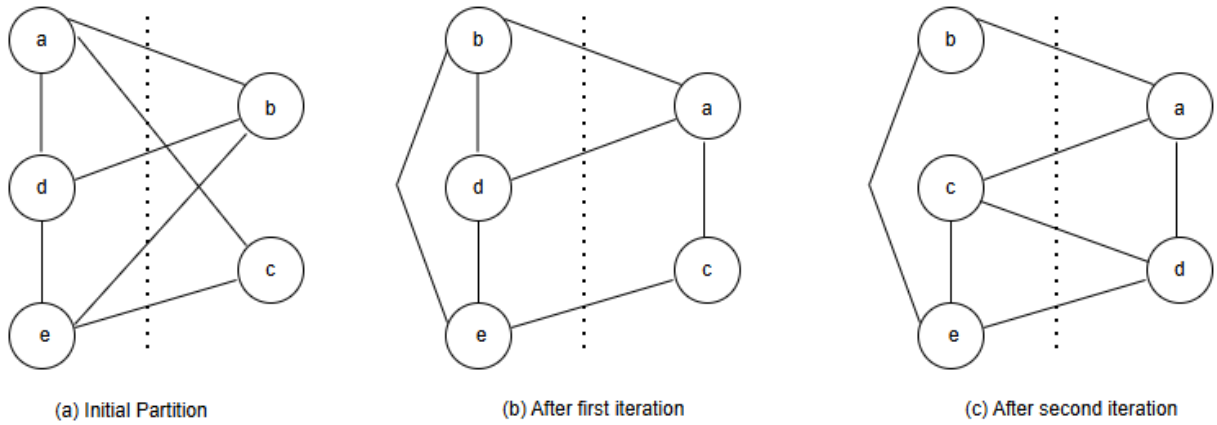

Fig. 3

(a)	From the scenario, identify if we **need** a **3rd iteration**, if yes, **perform the 3rd iteration**, **draw** the new graph, and **calculate** the new cut cost.	[2]
(b)	You need to design a CMOS circuit to implement the logic function $Y = \overline{AB + C}$ such that the worst case effective rise and fall resistance is equal to that of a unit inverter. **Calculate** the value of **Kp** and **Kn** for **each transistor** in this circuit. (**Hint**: The resistance of the **two parallel paths** must be the **same**).	[2]